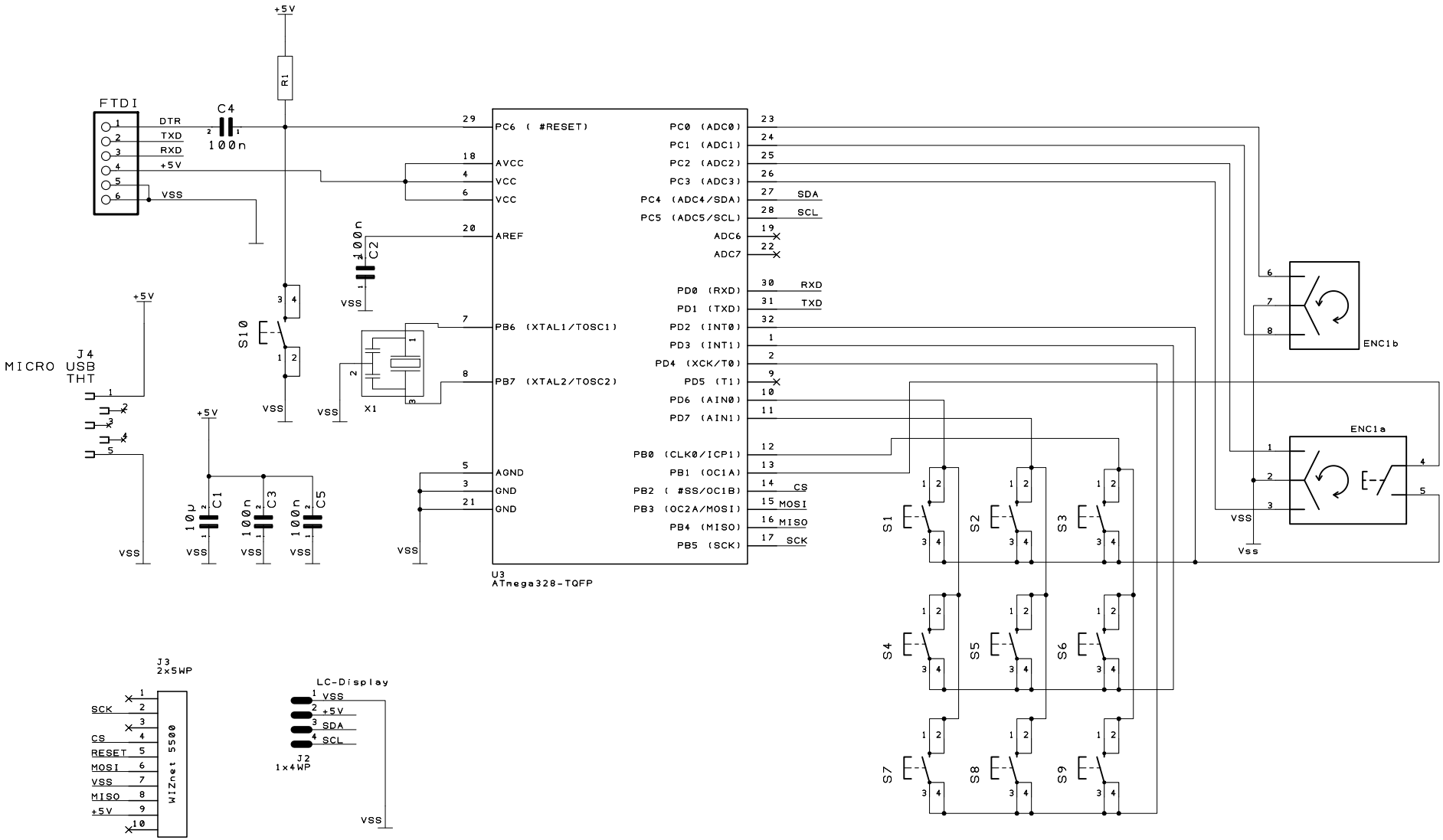

PROJECT:	Arduino Multi Funktion Panel for FlightSim
DRAWING TITLE:	ARDU-MFP-II_DUAL
DRAWN BY:	
REVISION:	1.0
SHEET:	OF
STATUS:	
DATE:	26.05.2021

Sim&IT