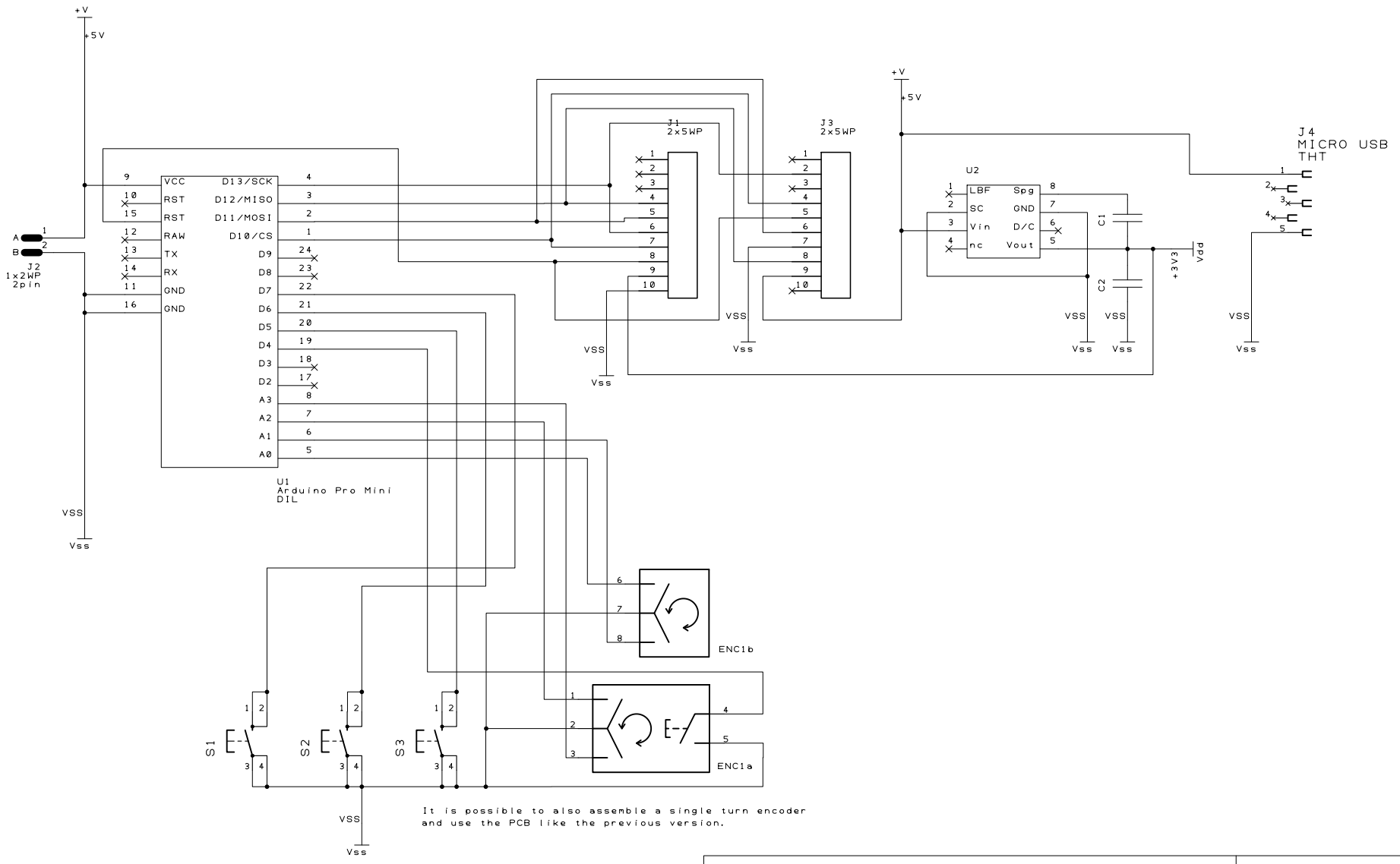


| | | | |
|---|---|---|---|
| **PROJECT:** | Arduino Avionics Module for FlightSim | | Sim&IT |
| **DRAWING TITLE:** | ARDU-FRQ_2.0 by Sim&IT | | |
| **DRAWN BY:** | | **REVISION:** 2.0 | |
| **SHEET:** | **OF** | **STATUS:** | |
| **DATE:** | 24.04.2021 | | |