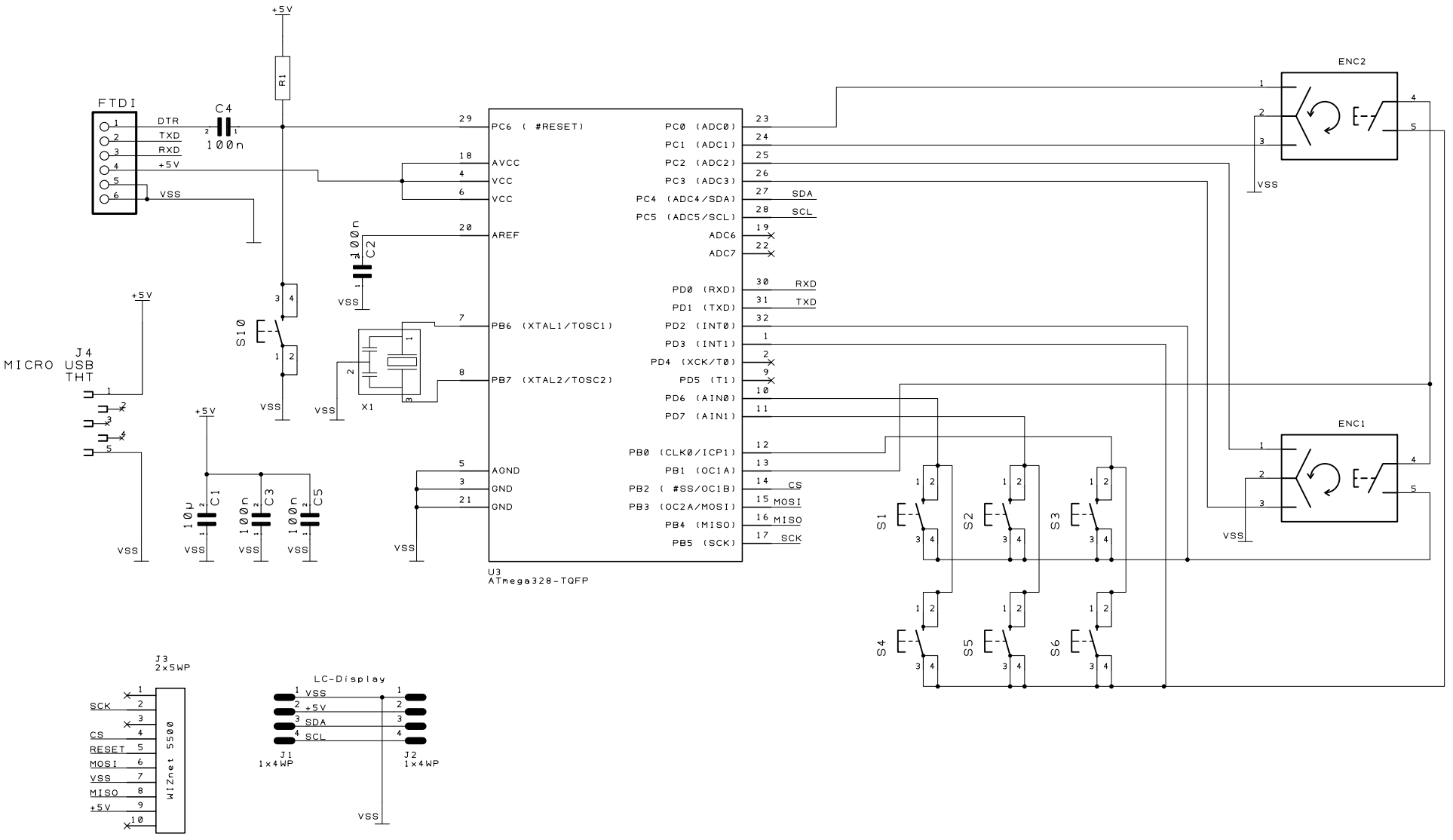

PROJECT: Arduino NAV-COMM-Panel for FlightSim		Sim&IT
DRAWING TITLE: ARDU-NAVCOM by Sim&IT		
DRAWN BY:	**REVISION:** 1.0	
SHEET: OF	**STATUS:**	
DATE: 16.03.2021		